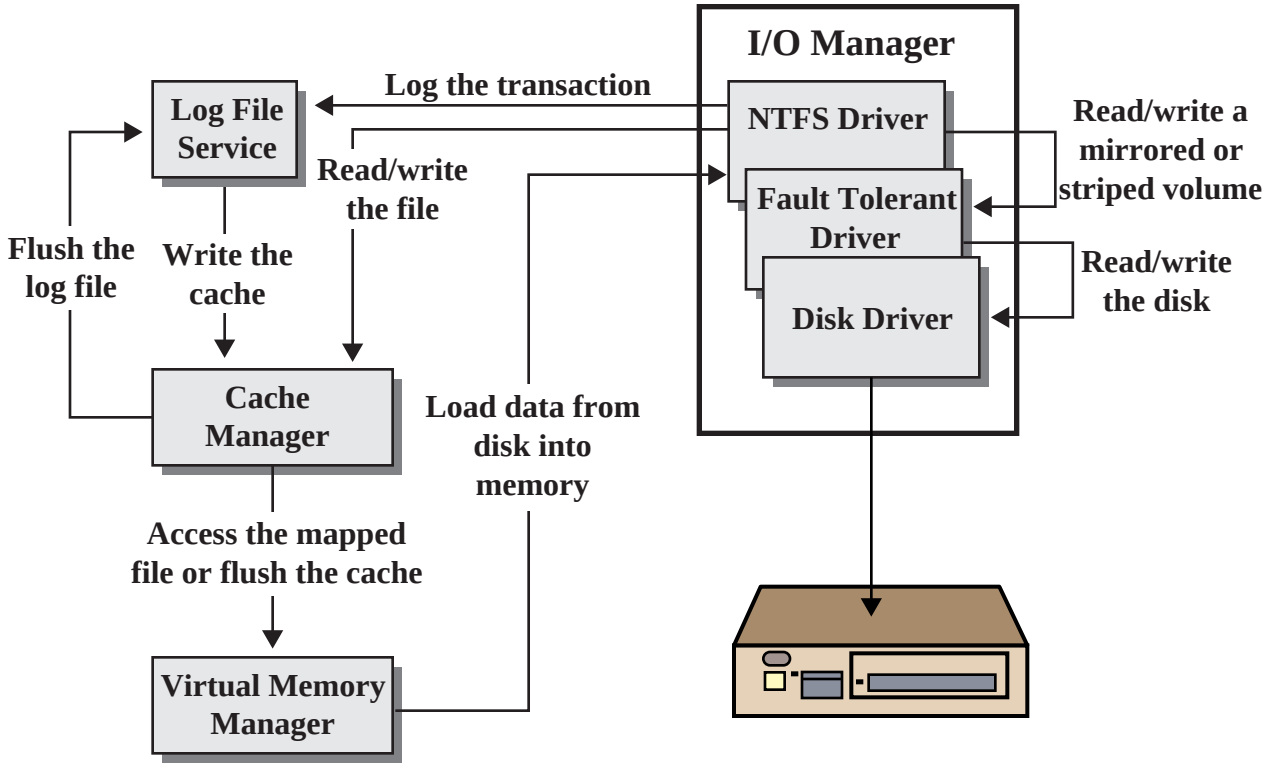

Figure 12.15 Windows NTFS Components [CUST94]