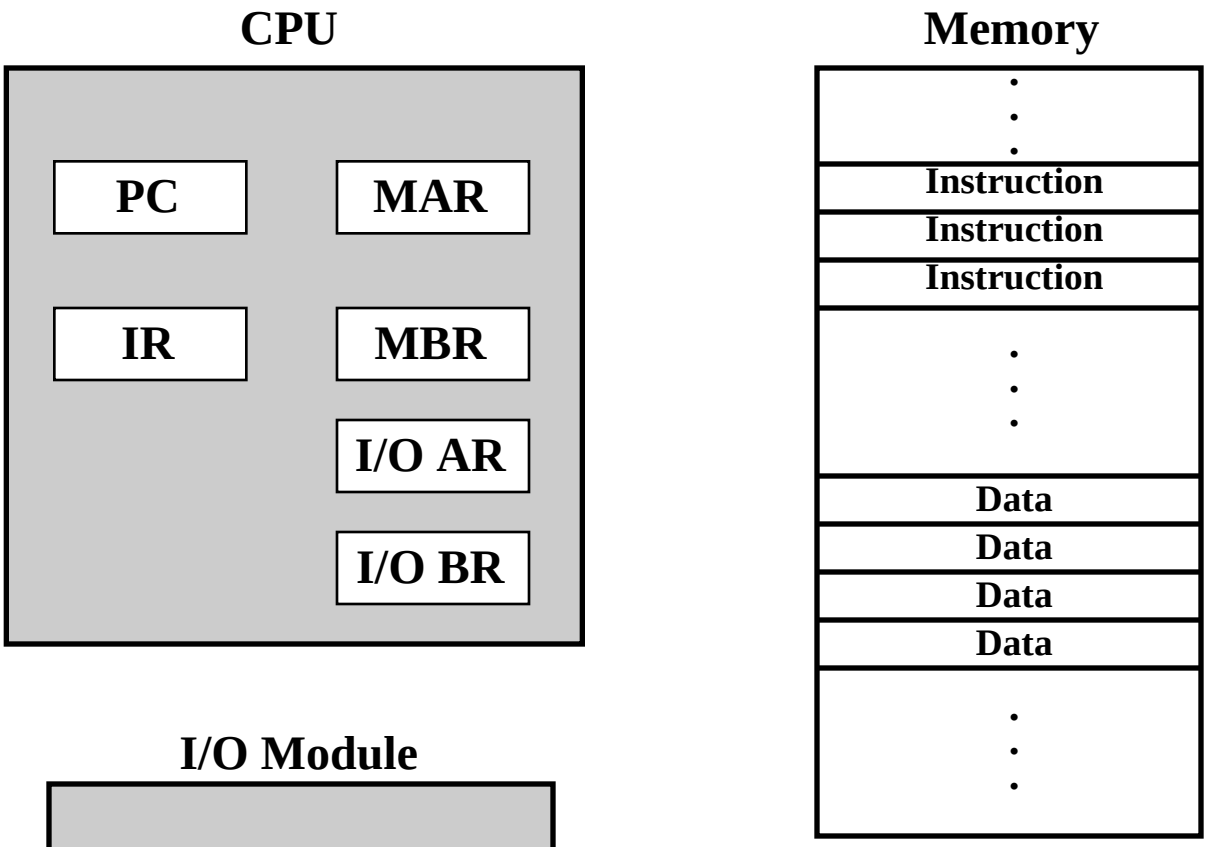

PC = Program counter
IR = Instruction register
MAR = Memory address register
MBR = Memory buffer register
I/O AR = I/O address register
I/O BR = I/O buffer register

Figure 1.1 Computer Components: Top-Level View