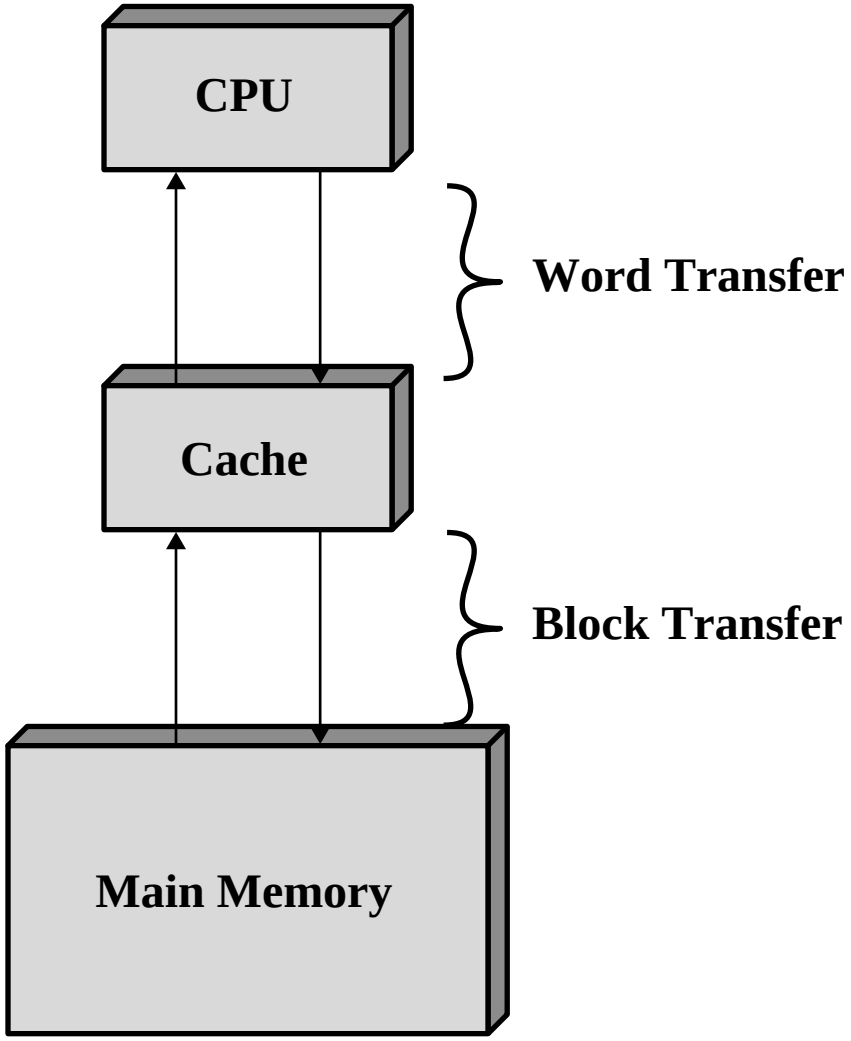

Figure 1.16 Cache and Main Memory